# SHEPHERD
MICRO RACING TEAM

# VELOX 8.3

| | |
|---|---|
| NAME | Jesse Keller |
| DATE | 14-04-2024 |
| EVENT | ENS ettlingen |
| TRACK | Ettlingen |
| AIR TEMP | 22 |
| TRACTION | Medium |
| BEST LAP | 13.235 |

CASTER 3.0 mm

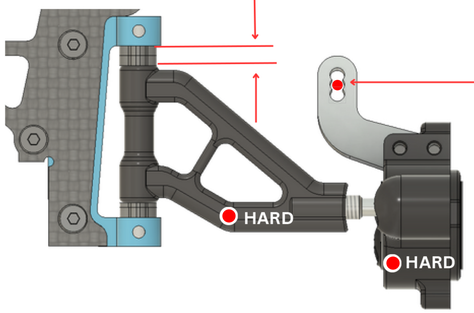


UPRIGHT INSERTS: CENTRIC ○ EXCENTRIC ✔

BUMP STEER 0.5 mm

FRONT ONEWAY POSITION

| | HIGH | | |
|---|---|---|---|
| BELT | 210mm ✔ | 210mm | 207mm |
| FRONT — REAR | | | |
| BELT | 210mm | 210mm | 207mm |
| | | LOW | |

ACTIVE ○ SHIM ___ mm

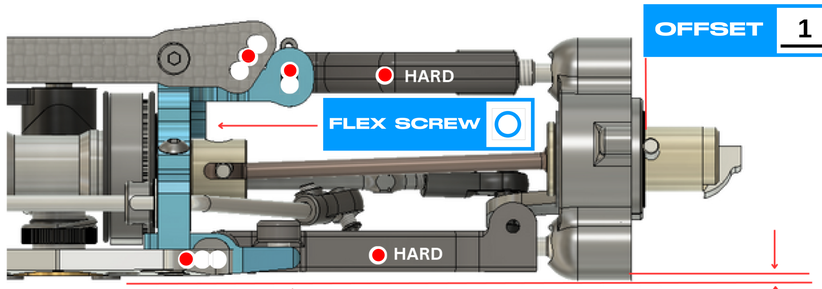


FLEX SCREW ○

OFFSET 1.0 mm

RIDE HEIGHT 8.0 mm

DOWNSTOP 1.0 mm

WHEELBASE: LONG ○ SHORT ✔

TOE IN/OUT 1.0°

CAMBER LEFT 2.0°

WIDTH 251.0 mm

CAMBER RIGHT 2.5°

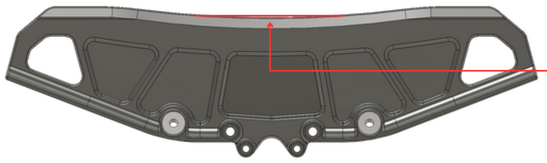

BODY: Blitz ts040

DISTANCE TO BUMPER 19 mm

AWS BATTERY TRAY ○

CARBON ✔ BRASS ○ | CARBON ○ BRASS ○ | CARBON ○ BRASS ○

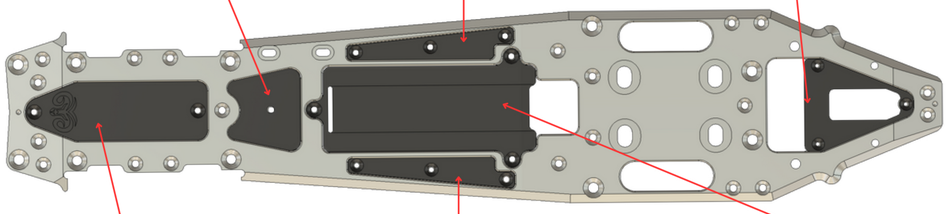

CARBON ○ BRASS ○ | CARBON ○ BRASS ○ | CARBON ✔ BRASS ○

## FRONT / REAR

| FRONT LEFT | FRONT RIGHT | TYRES | REAR LEFT | REAR RIGHT |
|---|---|---|---|---|
| ENS | Matrix | BRAND | ENS | Matrix |
| 32 | 32 | SHORE | 35 | 35 |
| 69 | 69 | DIAMETER | 76 | 76 |
| | | ADDITIVE | | |

## SHOCKS

| | | |
|---|---|---|
| Spashett white | SPRINGS | Spashett White |
| 650 | OIL | 800 |
| 1x1.2mm | PISTON | 2x1.2mm |
| 1 | HOLE | 2 |
| 811305 (kit, hard) | FP SPRING | 811305 (kit, hard) |

## ANTI-ROLL BAR

FRONT 2.2 mm REAR 2.9 mm

## FRONT AXLE

SOLID ○ SPLIT ● 90 DEG ○ STR ○

## CLUTCH

| | |
|---|---|
| TYPE | Standard kit |
| SHOE | Yellow |
| PRELOAD | 1.6 |
| GAP | 0.85 |

## GEAR RATIO

1ST 19 / 61 2ND 24 / 57

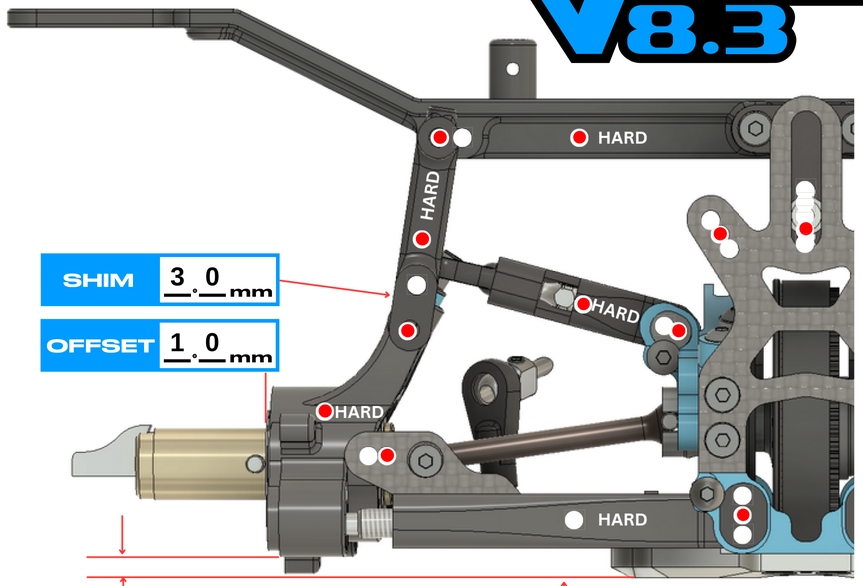


SHIM 3.0 mm

OFFSET 1.0 mm

DOWNSTOP 9.5 mm

RIDE HEIGHT 9.5 mm

CAMBER LEFT 3.0°

TOE IN/OUT 3.0°

CAMBER RIGHT 3.5°

WIDTH 261.5 mm

LONG ○ MEDIUM ✔ SHORT ○

8mm ○ 9mm ○ 10mm ●

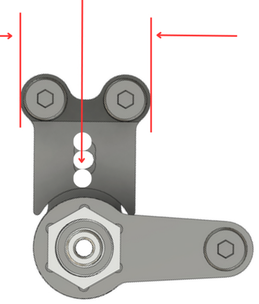

UPRIGHT INSERTS: F ● R ○

AERO DISCS: F ✔ R ○

| | | | | | |
|---|---|---|---|---|---|
| ENGINE | MAX RP9.5 | PIPE | MAX02099 | | |
| MANIFOLD | MAX 2164 | GLOWPLUG | RP7 | FUEL | Maxima |

## NOTES

Narrow shock bridge front
LHO rear carbon body mount ts040
Toe measured in total so /2 for each side
Lightweight front bumper
35g in front of engine + 10g in rear
20gr total added to rear roll center screws
Lho radioplate